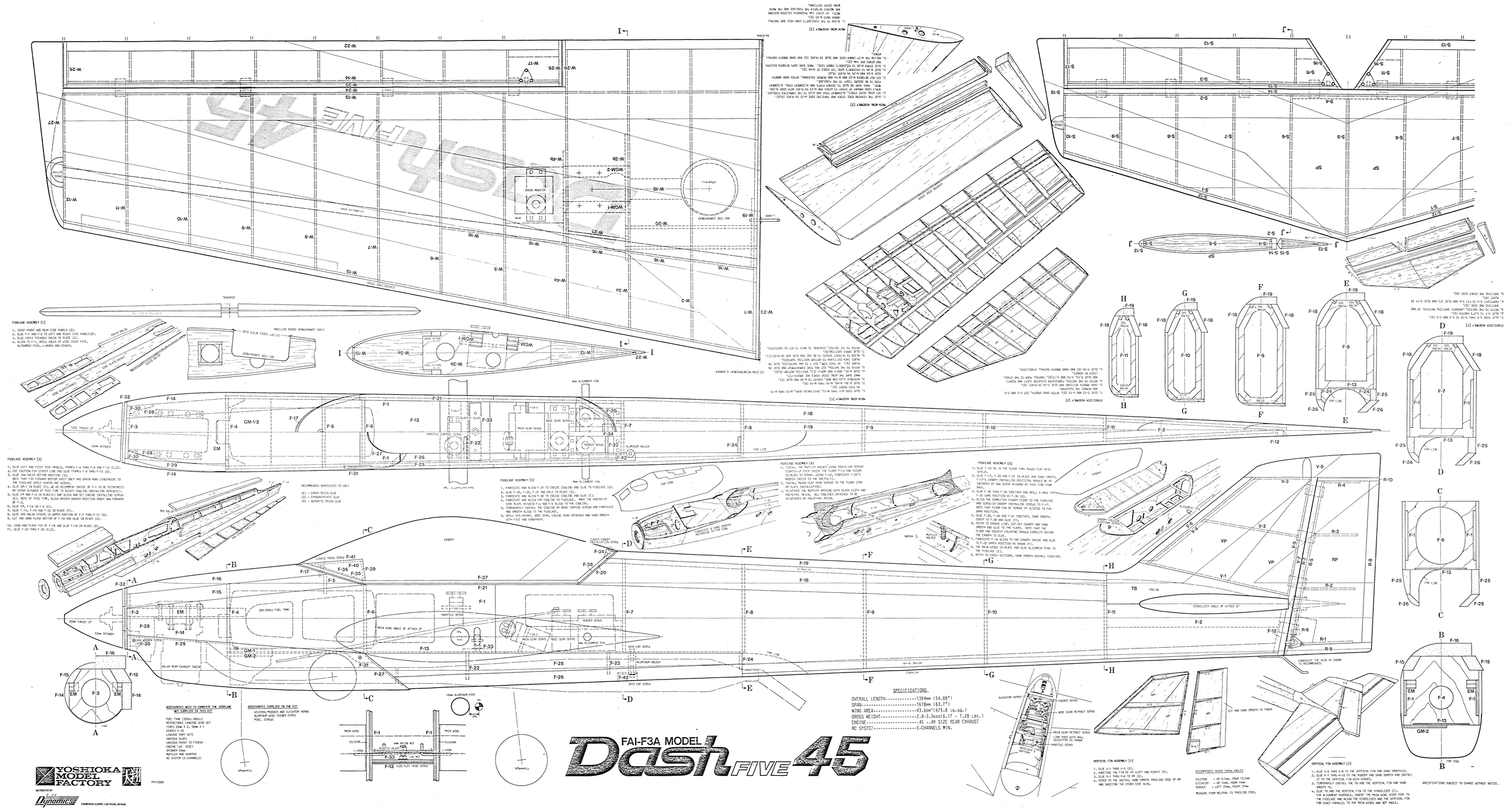
FAI-F3A MODEL
Dash FIVE 45
YOSHIOKA MODEL FACTORY
DISTRIBUTED BY
Dynamics
CHAMPAIGN, ILLINOIS - LAS VEGAS, NEVADA
SPECIFICATIONS
OVERALL LENGTH----------1394mm (54.88")
SPAN----------1618mm (63.7")
WING AREA----------43.6dm²(675.8 IN.SQ.)
GROSS WEIGHT----------2.8-3.3kgs(6.17 - 7.28 LBS.)
ENGINE----------.45 -.49 SIZE REAR EXHAUST
RC SYSTEM----------5-CHANNELS MIN.
SPECIFICATIONS SUBJECT TO CHANGE WITHOUT NOTICE.
ACCESSORIES NEED TO COMPLETE THE AIRPLANE
NOT SUPPLIED IN THIS KIT
FUEL TANK (320cc-360cc)
RETRACTABLE LANDING GEAR SET
TIRES 55mm X 2, 50mm X 1
HINGES X 20
LINKAGE PART SETS
VARIOUS GLUES
VARIOUS PAINT TO FINISH
ENGINE (45 SIZE)
SPINNER 63mm
MUFFLER AND ADAPTER
RC SYSTEM (5 CHANNELS)
ACCESSORIES SUPPLIED IN THE KIT
AILERON, RUDDER AND ELEVATOR HORNS
ALUMINUM WING DOWEL PIPES
MISC. SCREWS
RECOMMENDED SERVO THROW ANGLES
AILERON = UP 15mm, DOWN 10.5mm
ELEVATOR = UP 14mm, DOWN 15mm
RUDDER = LEFT 27mm, RIGHT 27mm
MEASURE FROM NEUTRAL TO TRAILING EDGE.
RECOMMENDED ADHESIVES TO USE:
(E) = EPOXY RESIN GLUE
(C) = CYANOACRYLATE GLUE
(R) = ALPHATIC RESIN GLUE
FUSELAGE ASSEMBLY [1]
FUSELAGE ASSEMBLY [2]
FUSELAGE ASSEMBLY [3]
FUSELAGE ASSEMBLY [4]
FUSELAGE ASSEMBLY [5]
VERTICAL FIN ASSEMBLY [1]
VERTICAL FIN ASSEMBLY [2]
STABILIZER ASSEMBLY [1]
STABILIZER ASSEMBLY [2]
STABILIZER ASSEMBLY [3]
STABILIZER ASSEMBLY [4]
MAIN WING ASSEMBLY [1]
MAIN WING ASSEMBLY [2]
MAIN WING ASSEMBLY [3]
MAIN WING ASSEMBLY [4]
SILICON REINFORCEMENT & DAMPER
SPECIFICATIONS SUBJECT TO CHANGE WITHOUT NOTICE.